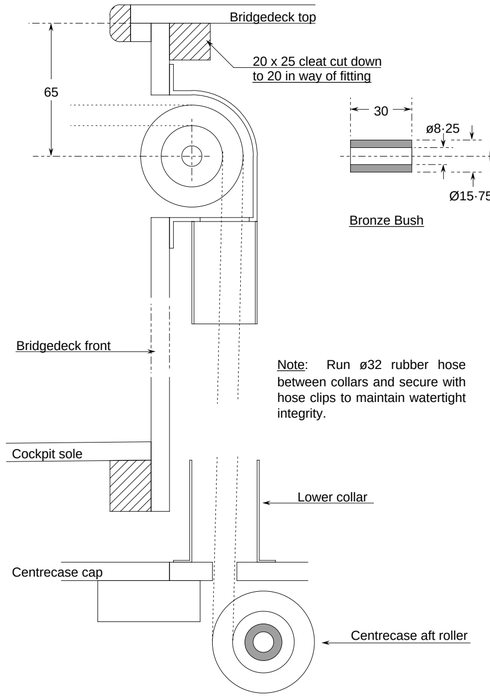

Note: Run ø32 rubber hose between collars and secure with hose clips to maintain watertight integrity.

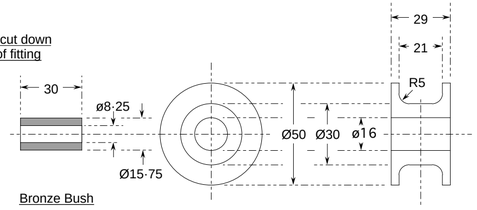

Delrin Roller

Note: Roller rotates on bronze bush which is secured tight by M8 hex bolt.

CENTRECASE ROPE LEAD
LOWER AND UPPER FITTINGS

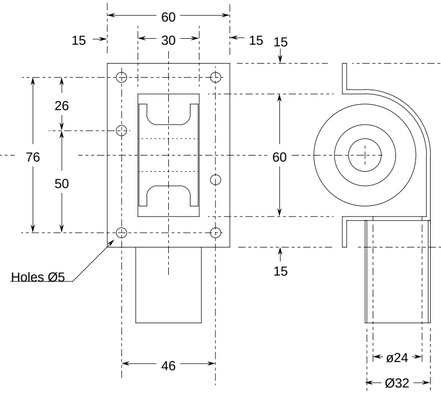

Stainless Steel
Housing

Note: Housing 2mm material; Ø32 tube 1mm material.

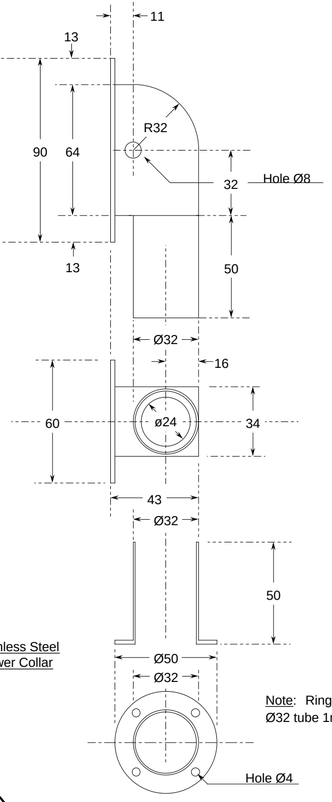

Stainless Steel
Lower Collar

Note: Ring 2mm material; Ø32 tube 1mm material.

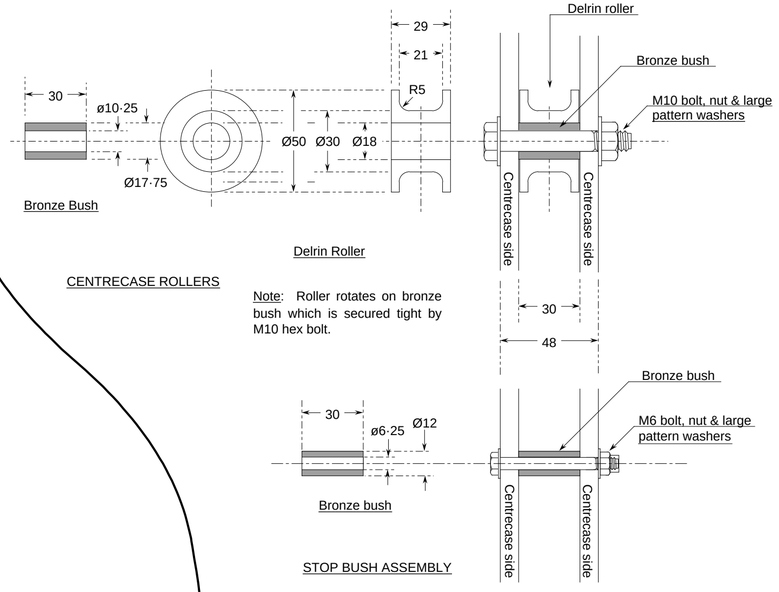

CENTRECASE ROLLERS

Note: Roller rotates on bronze bush which is secured tight by M10 hex bolt.

STOP BUSH ASSEMBLY

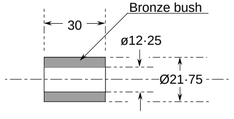

Note: Centreboard pivot bolt is M12 stainless hex bolt, nut & medium pattern washers. Bolt head & nut will be just countersunk into keel sides so length outside face of head to outside face of nut will be 100mm.

CENTREBOARD PIVOT BUSH

Specific Notes:

1. Hex bolts, nuts & washers are Grade A4 - or 316 S16 if turned from solid.
2. Bronze is non-dezincifying type (preferably aluminium bronze ISO CuAl7).
3. Delrin is low water absorbtion type >0·2%.

General Notes:

1. The Zero Point is the intersection of the Datum Water Line (dwl) with the stemface.
2. Positions are measured fwd and aft (marked "-") of the Zero Point.
3. Heights are measured above and below (marked "-") the dwl.
4. Offsets are measured each side of the fore-&-aft centreline.
5. Waterlines are designated "wl" followed by their height.
6. Buttocks are designated "b" followed by their offset.
7. Diagonals are designated "d" followed by their start height on the centreline and their angle to it.
8. Offsets on diagonals are measured down the angle of the diagonal.
9. Offsets are to inside of skin unless noted otherwise.

Whisstock
boats and boat plans
support@whisstock.com

Boat 077

Centrecase Rollers

Scale	1/2
Date	20/05/2000
Plan No.	077/005/05
Issue No.	01 web

All dimensions in millimetres unless noted otherwise

© bmarkweb Ltd 2002 All Rights Reserved