Starfire 23 – 7.00m Gaff Cutter

Whisstock
boats and boat plans
support@whisstock.com

Design 178	Scale 1/20
Starfire 23	Date 21 Dec 2018
General Arrangement	Plan No. 178/001/001
	Issue No. 01
	All dimensions in millimetres unless otherwise noted

© Debenriver Ltd 2018 All Rights Reserved

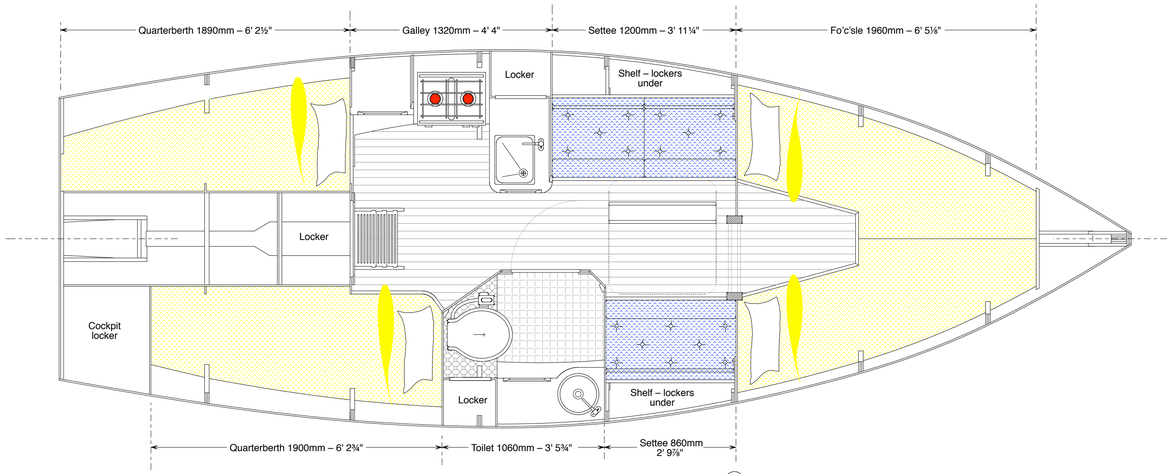

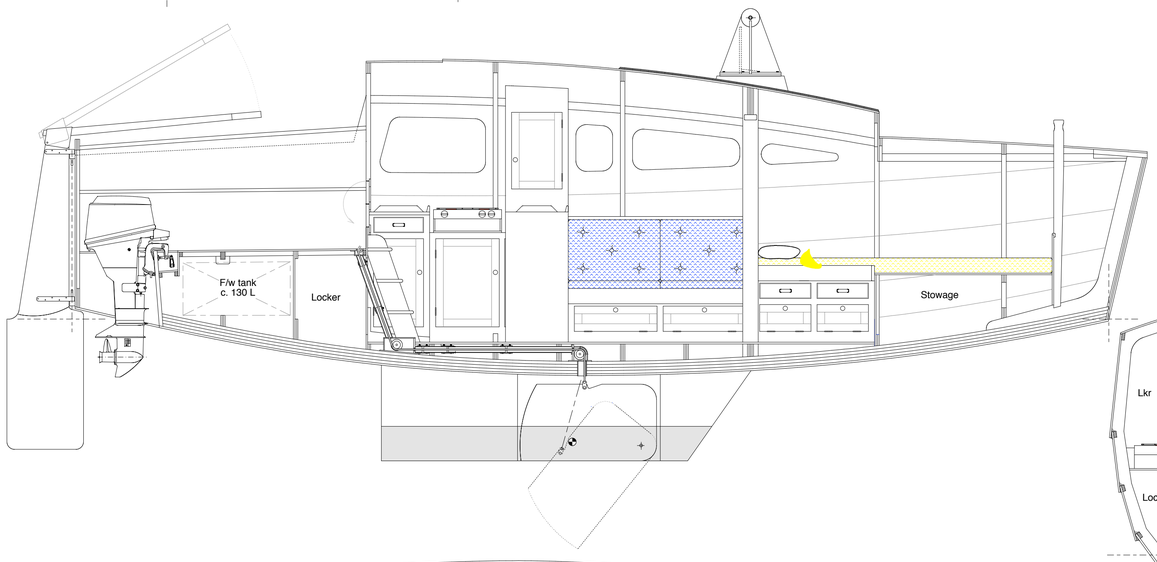

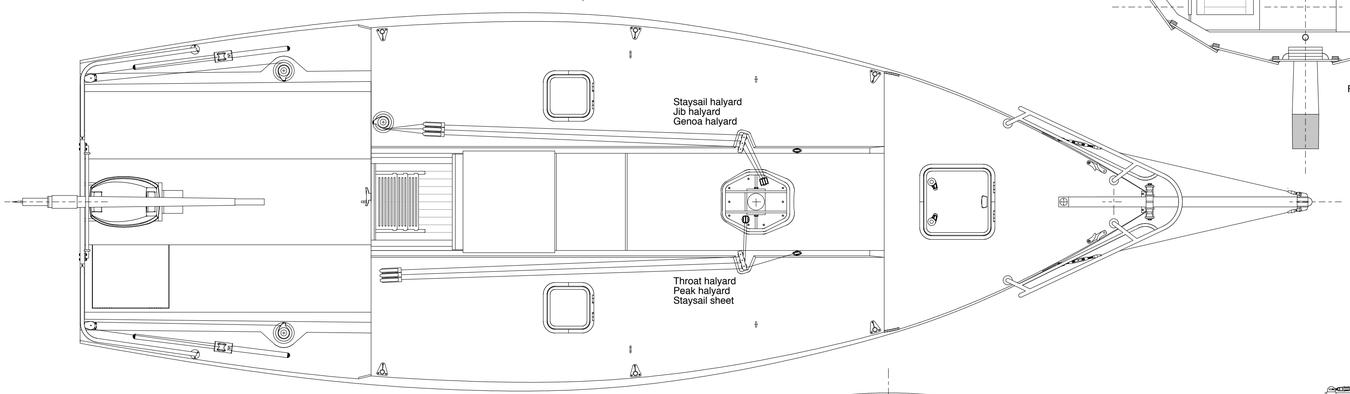

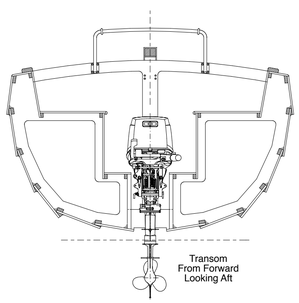

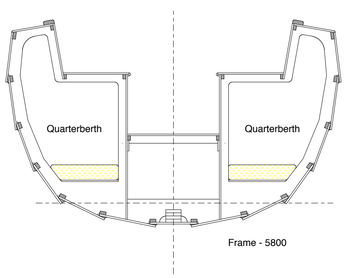

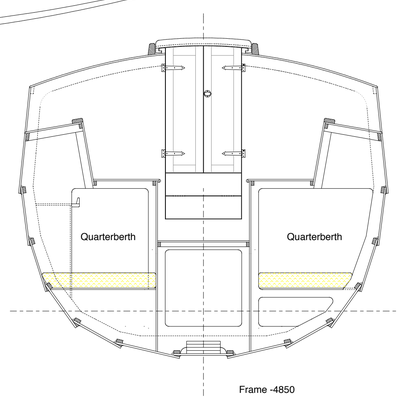

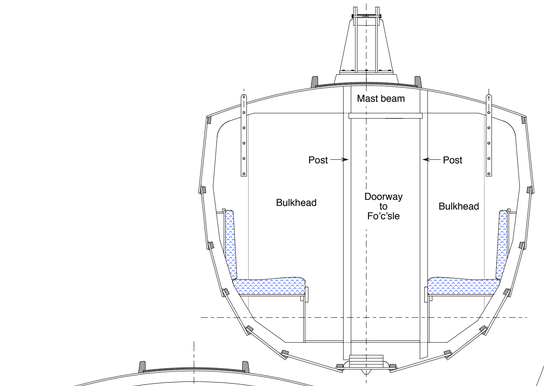

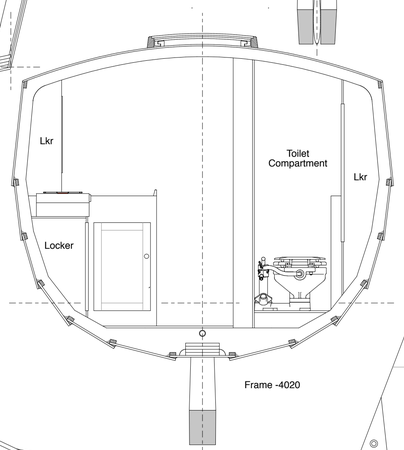

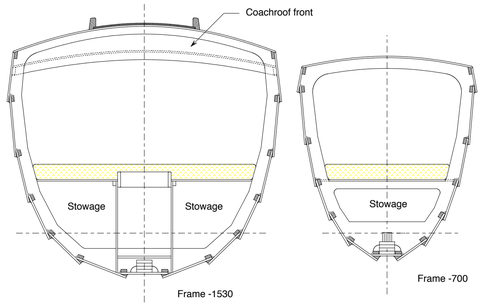

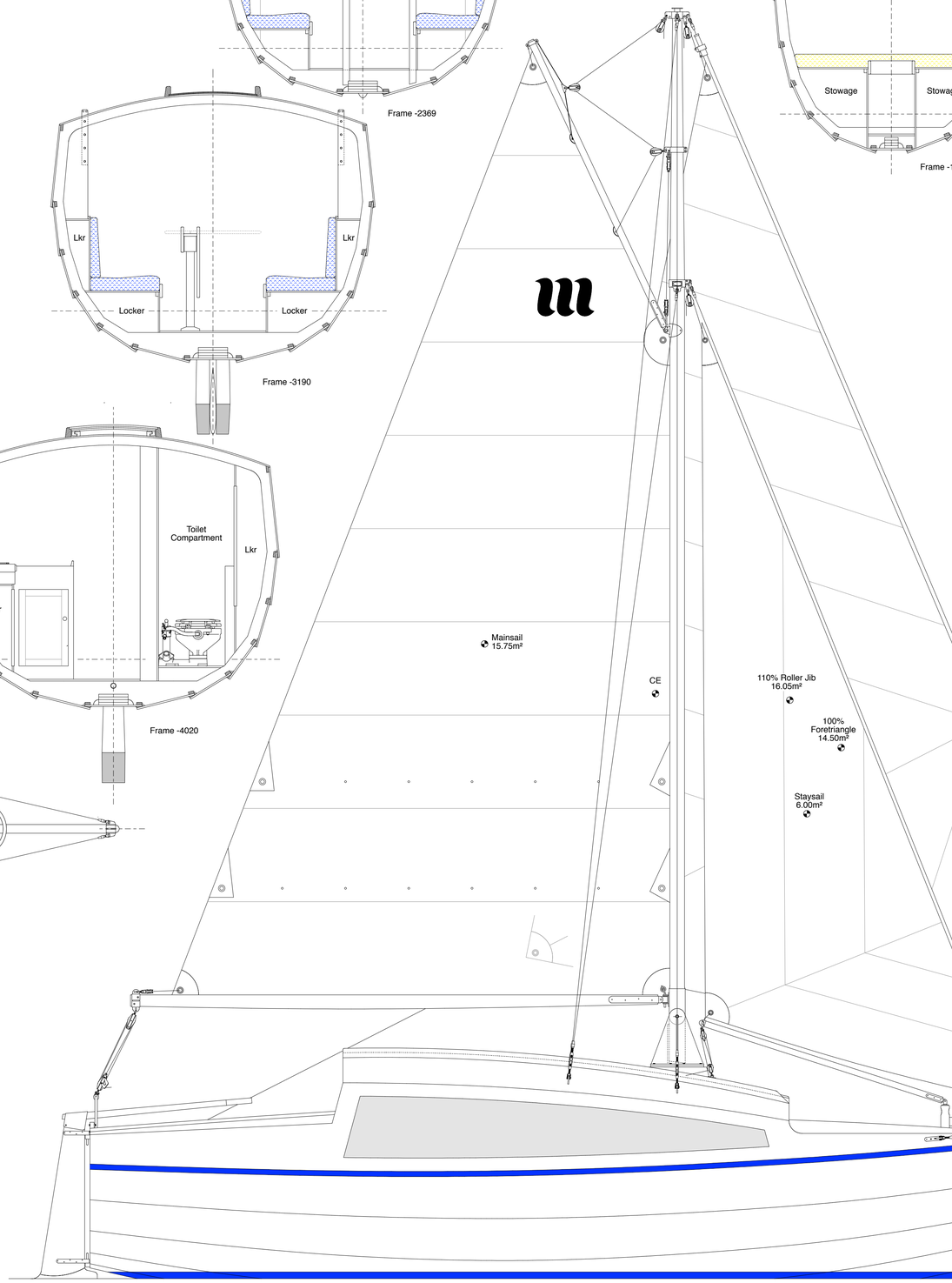

Principal Characteristics

LOA (inc bowsprit)	8.045	m	26' 4¾"
LoD	7.000	m	22' 11¾"
LWL	6.400	m	21' 0"
Beam	2.500	m	8' 2½"
Draft (board up)	0.925	m	3' 0⅜"
Draft (board down)	1.500	m	4' 11"
Displacement	2180	kg	4806 lb
Ballast	900	kg	1984 lb
Headroom (galley)	1.835	m	6' 0¼"
Headroom (toilet)	1.780	m	5' 10"
Headroom (saloon)	1.765	m	5' 9½"
Headroom (fo'c'sle)	1.580	m	5' 2¼"
I	8.240	m	27' 0⅜"
J	3.520	m	11' 6½"
P	4.870	m	15' 11¾"
E	3.740	m	12' 3¼"
100% Foretriangle	14.500	m²	156.0 ft²
Mainsail			
Luff	4.870	m	27' 0⅜"
Foot	3.740	m	11' 6½"
Leach	7.580	m	24' 10⅜"
Head	2.440	m	8' 0"
Area	15.750	m²	169.5 ft²
110% Roller Jib			
Luff	8.300	m	27' 2⅞"
Leach	6.850	m	22' 5¾"
Foot	4.685	m	15' 4½"
Area	16.300	m²	175.5 ft²
Staysail			
Luff	6.300	m	20' 8⅛"
Foot	2.400	m	7' 10½"
Leach	5.210	m	17' 1⅛"
Area	6.000	m²	64.5 ft²